LAB TASK 2

NETWORK TECHNOLOGIES

NAME: ASMA SALEEM

ROLL NO: 2024-CET-07

SEMESTER: 4TH

SUBMITTED TO: ENGR DR ASMA JAVAID

TASK: Implement network topology using proper cabling

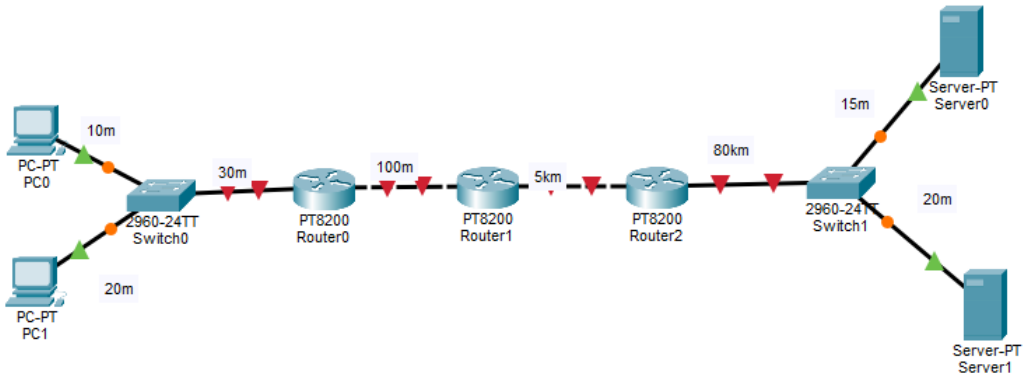

EXPLAINATION:

In this lab a network topology was created using cisco packet tracer. Different devices such as PCs, switches, routers and servers were connected using appropriate cables. Straight through

and crossover cables. Straight through and crossover cables were used according to the type of devices. This lab helped to understand the correct use of network cabling in a computer network.